Meeting®

Air to water heat pump

Operational Instructions

\

Foreword

Thank you for purchasing our product.

- When you get the product, please make sure if it is the same with the product you ordered and if any damage after transportation.
- For your safe and effective use of this product, please read this manual carefully before installation and use, and keep it for necessary reference.
- Hot water unit must be installed by a professional installer.
- For safety use, be sure to refer to the wiring diagrams before wiring. Do not make unauthorized alteration or repair this unit.
- After piping and wiring is complete, make sure it is correct before the unit is powered on.
- Forbidden to insert anything inside the unit or cover anything on the unit, in case of accidents.
- If the unit or water tank is mounted on the roof and other places vulnerable to lightening , be sure to adopt and implement lightning protection measures.
- When ambient temperature is at 2 ℃ or less, forbidden to cut power off. If unexpected power failure or power outage for maintenance needs, please open in time the unit drainage valve located at the junction of outlet and inlet pipes, drain the water in order to avoid cracking of the parts in the unit because of freezing. When no water in the unit, please put drain valve closed.
- If the unit is installed and used at ambient temperature below 0℃,protection measures should be made to avoid cracking when installing water pipeline of inlet and outlet.
- User is suggested to maintain the unit regularly to keep good COP.
- Professional installer should explain to the user how to use and maintain the unit properly.
- The specification is subject to change without prior notice.
- Water quality requirements

ph value	total hardness	conductivity	sulfide	chloride	saddle
6.5—8.0	<200uv/cm(25℃)	50ppm	none	＜50ppm	none
sulfate	silicon	iron content	sodium	calcium	
<50ppm	＜30ppm	＜0.3ppm	none	＜50ppm	

※I Introduction of the product

The working principle of heat pumps

Heat pumps are one of the most efficient heating and hot water systems available, as they utilise the solar heat stored in the surrounding air, in the ground or in ground water all year round.This free environmental energy provides approx. 75% of the heat pump's heating energy. With only 25% of external energy in the form of electricity, it achieves a heat output of 100%. Energy is extracted from the outside air, the ground or ground water via heat exchange systems. Then this heat enters a heat pump cycle, where it is raised to a temperature level suitable for heating purposes.

The working principle of heat pumps: the working fluid, in its gaseous state, is pressurized and circulated through the system by a compressor. On the discharge side of the compressor, the now hot and highly pressurized vapor is cooled in a heat exchanger, called a condenser, until it condenses into a high pressure, moderate temperature liquid. The condensed refrigerant then passes through a pressure-lowering device also called a metering device. This may be an expansion valve, capillary tube, or possibly a work-extracting device such as a turbine. The low pressure liquid refrigerant then enters another heat exchanger, the evaporator, in which the fluid absorbs heat and boils. The refrigerant then returns to the compressor and the cycle is repeated.

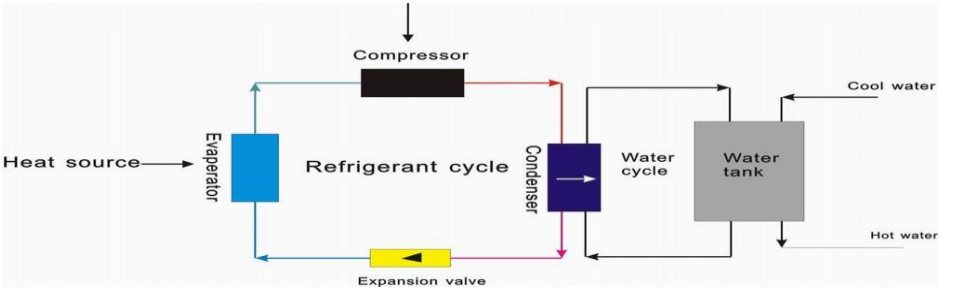

※II Parameters Tables

1. Parameters tables of ordinary, low temperature air source heat pump

Model	KFXRS-5I (MD15D)	KFXRS-7I (MD20D)	KFXRS-12I/II (MD30D)	KFXRS-18II (MD50D)	KFXRS-21II (MD60D)
Hot water capacity	120L/h	160L/h	280L/h	420L/h	500L/h
Heating capacity	5000W	7000W	12000W	18000W	21000W
Input power	1250W	1840W	2980W	4600W	5300W
Rated current	6A	9A	13/6A	9A	12.6A
Rated outlet water temp	55℃			55℃	
Rated power	220V～/50Hz	220V/380V~50Hz		380V~/50Hz	
Electric shock protection grade	Grade I				
Level of security	IPX4				
Working overpressure exhaust side	See the label				
Working overpressure sucking side	See the label				

Weight		78kg	78 kg	100kg	110kg	140kg	150kg	
Size	L	1200mm		1120mm	710mm	1120mm	810mm	
	W	380mm		490mm	710mm	490mm	810mm	
	H	720mm		710mm	760mm	980mm	1060mm	

Pipe size	DN25(1")			
Noise	≤40dB(A)	≤50dB(A)	≤55dB(A)	≤55dB(A)

Model		KFXRS-25I/II (MD60D)	KFXRS-36II (MD100D)	KFXRS-42II (MD150D)	KFXRS-72II (MD200D)	KFXRS-84II (MD300)
Hot water capacity		560L/h	840L/h	1000L/h	1680L/h	2000L/h
Heating capacity		25000W	36000W	42000W	72000W	84000W
Input power		5960W	9200W	10600W	18400W	21200W
Rated current		26/12A	18A	26A	36A	51A
Rated outlet water temp		55℃				
Rated power		220V/380V~50Hz	380V~/50Hz			
Electric shock protection grade		I				
Level of security		IPX4				
Working overpressure exhaust side		See the label				
Working overpressure sucking side		See the label				
Weight			330kg	350kg	650kg	670kg
Size	L		1450mm		1990mm	
	W		760mm		980mm	
	H		1060mm		2080mm	
Pipe size			≤55dB(A)		≤70dB(A)	
Noise			DN32(1.2")		DN50(2")	
Water pressure		≤0.6Mpa				
Grounding		≤0.1Ω				
Ambient temperature		-15～42℃				

Note: The above technical parameters are in working condition: ambient temperature dry bulb 20℃, wet bulb 15℃, inlet water temperature is 15 ℃, outlet water temperature is 55 ℃.

- There is around 6% of heat lost because of pipes, pumps, valves etc.
- The parameters are subject to change, please refer to the nameplate on the unit.

Note: The above product performance standards are GB4706.1-2005, GB4706.32-2012, GB4706.12-2006, GB/T21362-2008.

※Ⅲ Control panel illustration

Appliable for KFXRS—5I 、7I、12I、12II、18II、21II、24I、24II、36II、42II

MDY20D 、 MDY30D 、 MD50D 、 MDY60D 、 MDY100D 、 MDY150D

KFXRS—72II KFXRS—84II MDY200D MDY300

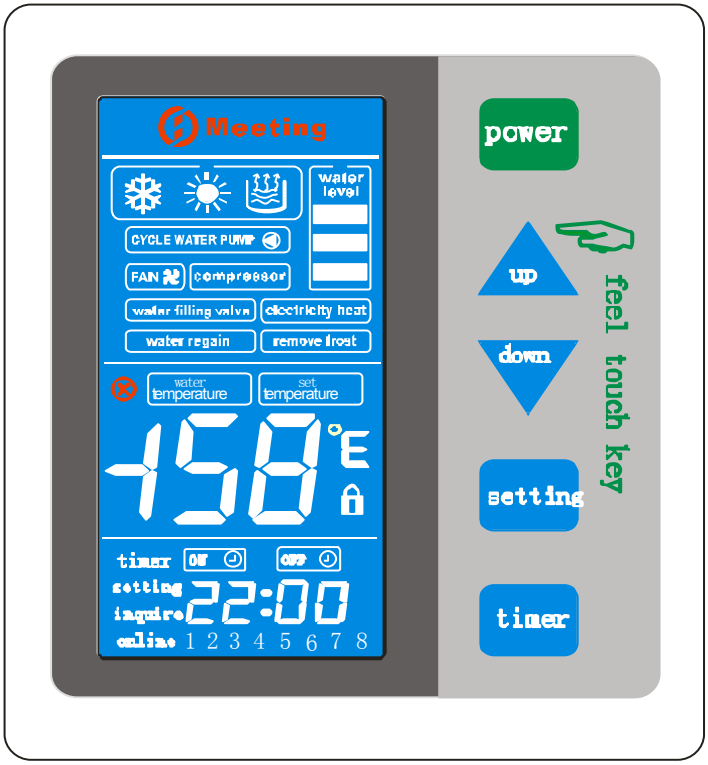

■ Operate：

Control panel power-on, buzzer give a long ringing ,LCD displayer, background light give micro light, now, the key-press are locked, it is ineffective to touch any key.

1 Unlock key-press:

Press “power” key by finger for more than 3 seconds, after hear “toot” sound ,move away finger, now background light give high light, key-press are unlocked, key-locked signal disappear (60s later, if any key isn’t pressed, key can be locked automatically, key-locked signal display).

2 On/off：

Press “power” key by finger, if control panel is under ON state, then Power off, if control panel under OFF state, then power on.

3 Water tank temperature setting ：

Touch“▲”, “set temperature” signal flash and display the preset temperature of water tank, touch “▲”again, the preset temperature of water tank increase. Touch“▼”, “set temperature ”signal flash and display the preset temperature of water tank, touch “▼”again, the preset temperature of water tank decrease. The setting range of water tank is 20 ℃to 60℃.

4 Definite time setting：

Touch **“**timer ”key, enter definite time setting state.

First adjust the “hour” of the first period of definite time for power-on, then touch” timer” key again, then adjust the “minute” of the first period of definite time for power-on, touch timer“ key again, then adjust the “hour” of the first period of definite time for power-off, touch “timer” key again, then adjust the “minute” of the first period of definite time for power-off. Touch “timer ”key again, enter the second definite time setting, the operation is the same as the first definite time setting ,until finish all the definite time setting, then quit setting.

After quit definite time setting, it display the ON and OFF signal.

Note: 1. when in the set-time period, if only need a regular time period, set the first fixed period of time according to stated above steps, the time of second set of startup and shutdown periods must be set to the same, then a regular period of time can be effective.

2. If only the timer of the first period is set, while the second is not set, then the setting function automatically exit after about 8 seconds.

3. First and second steps of the timing function key is for the regular startup, third and fourth ones is for pump of regular water supply, if not the pump function, it is inactive. However, set the start time, you must press the full four steps of all timing functions, no requirement for the third and fourth .

4.1 Cancel definite time:

Press “timer”key for 3s, hear a “toot” voice, then move away finger, then definite time setting canceled

5 Clock setting:

Press “timer”key for 3s, hear a “toot” voice, press continuingly, after press the “timer” key for

8s, when hear “toot” voice again, then move away finger, enter clock setting state, First adjust

the “hour” of clock, press “timer” key again, then “Minute” of clock, press “timer” key again,

then finish setting and quit setting.

Note: clock setting just can be operated under the condition of there isn’t definite time set.

6 Limited time password setting: press "function" key with finger for more than about 3 seconds when you hear the "beep" sound, continue the press for more than about 8 seconds, when once again hear the "beep" sound, move your finger away, into the limit time password setting mode.The first adjustment is C1, then finger press "function" key, adjust C2 ...,.

Password setting:

① There are five groups in the password setting number, C1, C2, C3, C4, C5, C1, C2, C3, C4 is adjustable from 0 to 99, C5 adjustable from 0 to 15, the first four groups are for passwords, the fifth group is for systems to limit the number of months (Note: When C5 = 0 cancel limit function. when C5 = 1 ~ 15, the system set the shutdown of unit after 1 to 15 months. including shutdown unused state time, display error code 11E).

② Setting: If you set a password for C1 ~ C4 different from the last time, the system will exit the password setting, if the same with the last time, then enter the new password setting and limit months, redisplay C1 ~ C4, if do not set a new password and use the original password, as long as press the "Function" key until C5 parameters displayed, when the C5 is set , press "function" key, then

the password setting is done and exit the setting mode.

7 Force defrosting:

After the heat pump was power on and the compressor has started, then press "▼"over 8 s,

when there is a "toot" sound, move away finger(or cooling), then it enters defrosting, when

the temperature of coil（evaporator）or defrosting time reach preset parameter, then it quits

defrosting.

8 Cooling mode:

After the unit turn on, in the hot water supply mode, press "▲" key with a finger for more than about 8 seconds, and when there is a "beep" sound, move the finger, then it enters the cooling mode (or cooling), water temperature range: 5 ℃ -30 ℃, in the cooling mode, press "▲" key with a finger for more than about 8 seconds, then it enters the heating mode (or heating)

※Ⅳ Parameter setting and inquiry（ attached table 1）

Table I: ordinary, low temperature air source heat pump

Under power on state, press "setting" key, inquiry code is from A1 to A9, if single compressor heat pump,

Press "setting" key again, then quit inquiry state, if double compressor heat pump, another 9 inquiry code can be inquired, from b1 to b9, press "setting" key again, quit inquiry state. Please check following stable：

Inquiry code	Meaning(single compressor Heat pump)	Meaning(syst)	Code	Meaning(syst)
A1	Coil(evaporator) Temperature1	Coil(evaporator) temperature 1	b1	Coil(evaporator) temperature 2
A2	Return gas temperature1	Return gas temperature1	b2	Return gas temperature 2
A3	Exhaust temperature1	Exhaust temperature 1	b3	Exhaust temperature 2
A4	Environment temperature1	Environment temperature	b4	Environment temperature2
A5	Outlet water temperature1	Outlet water temperature	b5	Outlet water temperature2

A6	Return water temperature1	Return water temperature	b6	Return water temperature2
A7	00	00	b7	00
A8	Compressor current 1	Compressor current 1	b8	Compressor current 2
A9	Opening angle of expansion valve 1	Opening angle of expansion valve1 1	b9	Opening angle of expansion valve1 2
Er	Display of error code	Display of error code	Er	Display of error code
C1	Coil(evaporator) Temperature3	Coil(evaporator) temperature 3	D1	Coil(evaporator) temperature 4
C2	Return gas temperature3	Return gas temperature3	D2	Return gas temperature 4
C3	Exhaust temperature3	Exhaust temperature 1	D3	Exhaust temperature 4
C4	Environment temperature3	Environment temperature	D4	Environment temperature4
C5	00	00	D5	
C6	Return water temperature3	Return water temperature	D6	Return water temperature4
C7	00	00	D7	00
C8	Compressor current3	Compressor current 3	D8	Compressor current 4
C9	Opening angle of expansion valve 3	Opening angle of expansion valve13	D9	Opening angle of expansion valve1 4
Er	Display of error code	of error code	Er	Display of error code

Note: 1 If with our thermostat, you can query through the panel to A7 ,water flow . Without it,

00 will display.

2 To inquire history of errors,when inquire the error code to the ER, press "▲ " key, you can query from ER1 to ER6, six memory of errors.

Table II: hot water, floor heating type air source heat pump

In the running state, press "function" key with a finger, query code can be added from A1 to

Er, then press the "function" key to exit the query, the corresponding as follows:.

Inquiry code	Meaning(single system)
A1/B1	Temp of coil
A2/B2	Temp of cycle gas
A3/B3	Temp of discharge gas
A4/B4	Ambient temp
A5/B5	Temp of outlet
A6	Temp of floor
A7/B7	00
A8/B8	Current of compressor
A9/B9	Angle of expansion valve
Er	Display of error codes

※Ⅴ Function setting:

Table I: ordinary, low temperature air source heat pump

Under power on state, press "setting" key over 8s, when hear "toot" voice ,move away finger, enter parameter setting state, after parameter set, press "setting" key ,enter next parameter setting, until all the setting of parameters are finished ,then quit setting.

Set code	Parameter name	range	Initial
/ / /	Water tank temperature	20℃-55℃	Shower:50-55℃ Swimming pool:28-30℃ SPA: 35-42℃
L1	Temp difference between water tank real temp and display temp	0℃-15℃	0℃
L2	Temp difference between compressor stard restart temp and preset water tank temp	3℃-18℃	5℃
L3	Set supply hot water temp	35℃-99℃	55℃
L4	Water tank temp upper limit setting	30℃-99℃	60℃(swimming pool Heat pump is 45℃)
L5	environment temp at which electric heating startup	0℃-35℃	0（0 mean nonelectric heat）
L6	Return water temperature	30℃-65℃	45℃

L7	Temp at which cool water supply allowed	20℃-60℃	20℃(20℃means cool water can't be supplied)
L8	Compressor current	0-48A	0(0 means not detect)
h1	Cycle of defrost	20—99min	35min
h2	Temp of enter defrosting	-15℃-1℃	-3℃
h3	Runtime of defrost	5-20min	15min
h4	Temp of quit defrosting	1℃-40℃	25℃
p1	Cycle of electric expansion valve regulating	20-180S	60s
p2	Degree of superheat	-8℃-15℃	0
p3	Exhaust temp allowed when expansion valve adjusting	70℃-135℃	85℃
p4	Electric expansion valve opening angle when defrosting	6-55degree	50 degree
p5	Min opening angle of electric expansion valve	6-30degree	15 degree
P6	Compensation of superheat degree	0-12℃	4℃

Table II: hot water, floor heating type air source heat pump

Set code	Parameter name	range	Initial
/ / /	Water tank temperature	20℃-55℃	55℃
L1	Temp difference between water tank real temp and display temp	0℃-15℃	0℃
L2	Temp difference between compressor stard restart temp and preset water tank temp	3℃-18℃	5℃
L3	Set supply hot water temp	35℃-99℃	55℃
L4	Water tank temp upper limit setting	30℃-99℃	45℃(20℃for no floor heating)
L5	environment temp at which electric heating startup	0℃-35℃	0 (0 mean no electric heating)
L6	Return water temperature	30℃-65℃	45℃
L7	Temp at which cool water supply allowed	20℃-60℃	20℃(20℃means cool water can't be supplied)
L8	Compressor current	0-48A	0(0 means not detect)
h1	Cycle of defrost	20—99min	45min

h2	Temp of enter defrosting	-15℃-1℃	-3℃
h3	Runtime of defrost	5-20min	15min
h4	Temp of quit defrosting	1℃-40℃	25℃
p1	Cycle of electric expansion valve regulating	20-180S	60s
p2	Degree of superheat	-8℃-15℃	0
p3	Exhaust temp allowed when expansion valve adjusting	70℃-135℃	85℃
p4	Electric expansion valve opening angle when defrosting	6-55degree	50 degree
p5	Min opening angle of electric expansion valve	6-30degree	15 degree
P6	Compensation of superheat degree	0-12℃	4℃

Note: If not using our thermostat, make straight the water when the L3 set to the minimum of 35 degrees, otherwise it will cause alarm

※Ⅵ Function description

- **1、Heating** (Hot water, floor heating water run priority)

1.1 Hydronic heating

1.1.1 Flowsheet of hydronic heating

power on→water level switch test→ water pressure switch test→cycle water pump work(16s)→ water flow switch test→fan work（6s）→compressor work（when low water level disconnect，cool water supply switch on, compressor、fan、cycle water pump work.

1.1.2、Cool water supply controlling

（1)、when low water level switch disconnected, cool water supply switch on and begin supply water, cycle water pump startup, fan off, compressor off.

（2)、when low water level switch on, cycle water pump on, fan on,compressor on, hydronic heating begin. meanwhile water supply valve begin to supply water according to the preset water supply temp L7.：if water tank temperature≥L7，water supply valve open，supply water；if water tank temperature≤ L7-5degree，water supply valve close，stop supplying water.

（3)、after high water level close up, stop supplying water. If high water level has closed up before, when it disconnect again, not supply water at once, it will

supply water until middle water level disconnect.

Notice:: if L7=20℃,water supply is not controlled by water temperature.

1.1.3、Water temperature controlling

Range of water temperature controlling：35-60℃

1.1.4 Running controlling

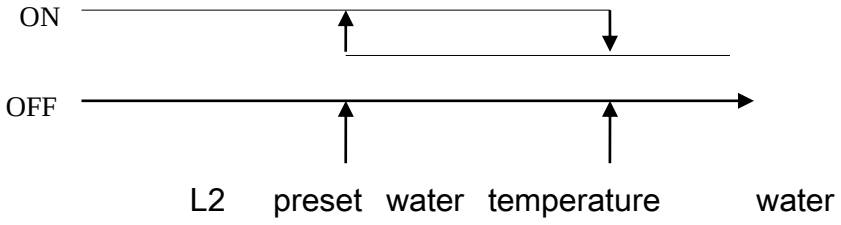

temperature

1.2 Instantly heating

1.2.1

Power on→water pressure switch test→open water supply valve to supply water→fan on→compressor on, after high water level connected, water supply valve close, if water tank temperature doesn't reach preset temperature, cycle water pump on, water was heating to preset temperature circularly, then power off.

1.3 Supply water controlling

（1）when high 、middle、low water level switches all disconnect, water supply valve supply water, then check water pressure switch, if water pressure switch is closed up, then fan on, compressor on, thermostat on, begin to supply water unstill high water level switch closed up, thermostat and water supply valve close ,stop supplying water.

（2）if high water level switch have been closed up, when the high water level switch disconnect, it will not supply water at once, it must unstill middle water level disconnect. Then water supply valve on, fan on, compressor on, thermostat on.

1.4 Water temperature controlling

Range of water temperature controlling: 35-65℃, when preset temperature reach 60℃, if want to set the water temperature ＞ 60℃,press ▲ key over 6s , when hearing a

“toot” voice , move away finger , press ▲ key again, now the max water temperature can be set at 65℃

1.4.1 Running controlling

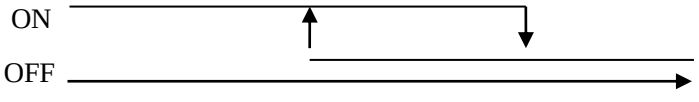

1.5.1 In the total 4 system , if have one was in Error , then the others will not affected , And the error system will give error code .

1.5.2 Compressor Control :

When the first one star up , then the others will star one by one every 3 second .

● 2 、Auxiliary electric heating controlling

2.1 Condition of auxiliary electricity heating startup

A. under heating hot water state;

B. water tank temperature +5℃≤ preset temperature

C. water tank temperature ＜ 45℃

D. environmental temperature ≤ L5

All of the above conditions are met at the same time, the auxiliary electric heating startup

2.2 Condition of auxiliary electricity heating stop.

A. under forced defrosting state;

B. water tank temperature≥ preset temperature

C. water tank temperature ≥ 50℃

D. environmental temperature＞L5

Any one of above conditions is met, the auxiliary electric heating will stop

If either of the above, the auxiliary heating will be off. (Note: When set L5 00, it means no auxiliary heating)

● 3、Defrosting running

（at the condition of parameters are not changed, the default defrosting process of system is following， if need amending, then defrosting will be according to the amended method）

3.1、conditions of enter defrosting

A cumulative runtime of compressor reach 35 minutes when heating, and continuing runtime over 6 minutes

B evaporator copper pipe temperature under h2 (the original values -1℃,changeable)；

If both A,B conditions are met, then enter defrosting, from beginning to the end of defrosting, LCD display defrosting signal. (when defrosting, cycle water pump on,4-way valve on, compressor on, fan off, thermostat off)。

C Running state when defrost:

Compressor off, fan off, postpone 50s , 4-way valve open, postpone 40s still ,compressor on, cycle water pump on.

3.2、conditions of quit defrosting

A: Evaporator coil pipe temperature≥ h4 (original value is 12℃,changeable)

B: Defrosting time ≥h3 (original value is 10 minutes, changeable)Note: any one of above condition is met, System quit from defrosting, specific action and time sequence as following chart:

Note: Any of the above conditions is met, the system exits defrosting. Specific actions and timing as shown below:

C:Running state: compressor off, fan on, postpone 60S, four way valve off, postpone30s still, compressor on, cycle water pump on.

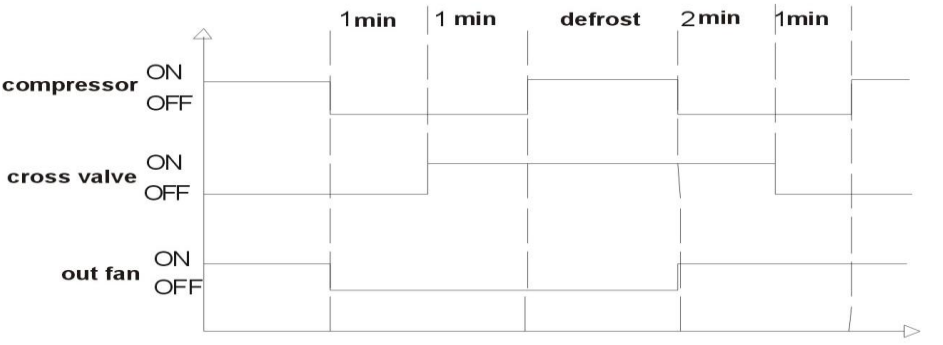
1min
1 min
defrost
2min
1min
compressor
ON
OFF
cross valve
ON
OFF
out fan
ON
OFF

4 Cycle water pump:

Water pump turn on when heat pump running, if heat pump stop, postpone 30s, then water pump stop (if select instantly heating mode, when water supply valve and thermostat turn on, then cycle water pump turned off, it just turn on when the water in tank need to reheat) .

5 four way valve:

4-way valve turn off at normal heating water state, it just turn on when defrost. But if cooling water, it turn on.

6 Water supply valve:

Refer water supply controlling (when defrosting, it does not supply water)

7 crankcase heating :

When environment temperature < 8℃, crankcase turns on, when compressor startup, crankcase heating stop. if compressor don't run within one hour, crankcase heating turns on; When environment temperature≥ 8℃, crankcase heating stop.

8 Return water valve :

The condition of return water valve open

A. Low water level switch on

B. Water tank temperature ≥L6+5 ℃

B. Return water temperature≤≤ L6

D. The preset interval time of water return is reach.

Above conditions are met at the same time, return water valve open.

The condition of return water valve close:

When Return water temperature ≥L6, return water valve close.

9 Automatically running:

Under the condition of no control panel or control panel is damaged, system check about 1 minute, confirm there is not control panel enter automatically controlling.

When run automatically:

Water tank preset temperature =55℃

Deviation value of Water tank temperature =0

Temp difference at which Compressor can restart after compressor stop = 5℃

Temperature at which system enter defrost state = -3℃

Defrost runtime = 15 minutes

Temperature at which system quit defrost state =25℃

- **10** Multi-system, if one system fails then the other system to continue operating while unaffected faulty system reported error code.
- **11** Compressor control: Since the first compressor starts, the each of other compressors delay 3 seconds to start.
- **12** Fan control: (four system EVI machine can be used)
  High and low speed operation control

Fan control: When the unit runs, if the ambient temperature is higher than temperature set in L9, the fan is in a low speed running state; when the ambient temperature is lower than L9-3 degrees, the fan turns to a high speed
running'state.

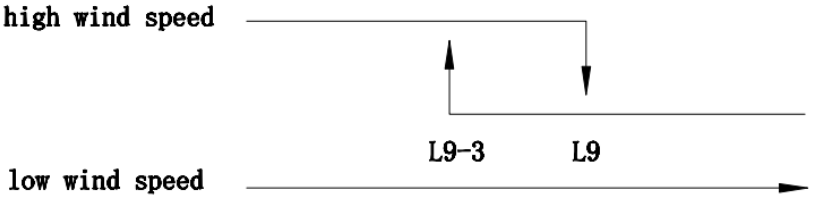

- **13** Thermostat Control: By setting the water temperature L3, based on the water temperature detected by
the temperature sensor, for adjusting the flow rate of water flow into the machine, to make the temperature of to reach the temperature set by L3.

NOTE: If the heat transfer efficiency (COP)of the machine is relatively low, it is recommended to set the L3 between 45-50 degrees, then make the water reach the temperature set by controller by circulation.

- **14** Electronic expansion valve control: control by overheat control, adjust the

mainly based on difference between returned gas coil (P2 adjustable), and adjust according to exhaust gas temperature, ambient temperature, and water temperature.

Note: It is recommended P1: set at 60 seconds or more as well.

P2: overheat adjustment is set to 0,

P3: according to the system, be set, mainly the exhaust gas temperature reaches the set test value P3, the

electronic expansion valve gradually open big, so as to protect the machine effect.

P4: defrost electronic expansion valve opening degree: set at 50.

P5: Minimum opening: best set at 15 degree or above, so as not to place the machine out to cool when the

expansion valve is stuck, causing too low pressure .

P6: overheat compensation set at four

- **15** EVI

Spray valve

Working conditions:

a, when the ambient temperature is less than 20 degrees, 1 minute after the compressor starts, spray valve open;

b, compressor stops, ambient temperature is above 22 degrees, spray valve closes.

Pressure relief valve

Working conditions: When the exhaust temperature reaches 100 degrees, the solenoid valve B opens. Exhaust temperature dropped 85 degrees, the solenoid valve B turns off.

- **16** Floor heating operation

16.1 three-way valve: domestic hot water mode, three-way valve opens, floor heating mode three-way valve

turns off.

16.2 When the domestic water reaches the set temperature, the system will automatically turn three-way valve

to floor heating, the temperature of floor heating in L3, when L3 is set to 20 ℃, no floor heating function.

When the floor heating water reaches the set temperature, the system enters standby mode.The system

automatically switches to the domestic hot water mode.

- **17** DIP switch select

Single system, four systems

DIP switch 1 to ON side for the single-phase power , to figures side for three-phase power .

DIP switch 2 to ON side for ordinary unit, to figures side for swimming pool.

DIP switch 3 to ON for standby

DIP switch 4 to ON side circulation, to figures sice for direct heating + circulation

Double systems

DIP switch 1 to ON side for the single-phase power, figures side for three-phase power.

DIP switch 2 to ON side for ordinary unit, to figures for swimming pool.

DIP switch 3 to ON side circulation, to figures sice for direct heating + circulation

- **18** Protection illustration

1、Protection of compressor postpones 3 minutes, both compressor turn on and off need 3

minutes. every time, compressor needs 3 minutes to restart after it stopped.

2、Water flow switch protection (hydronic heating system use it). (1) When the circulation pump

runs, the compressor does not start, if the flow switch is off for 20 seconds, turn off all outputs and it displays

error code, it continue for 3 minutes, it will stop the error display. It needs to start the circulation pump to

check water whether flow switch is closed, if close, press the controller as usual. If not, do as the above error

procedure. (2) When the circulation pump running, the compressor starts running, if the flow switch is off for

8 seconds, turn off all outputs and it stop the error display. It needs to start the circulation pump to

check water whether flow switch is closed, if close, press the controller as usual. If not, do as the above error

procedure.

3、High exhaust temperature protection: when exhaust temperature≥115℃ and lasts for 30s, system consider temperature is too high, it will stop all outputs, display error code.When the detect exhaust gas temperature dropped to 90 degrees, it will cancel the alarm, and the compressor will delay for 3 minutes, the system will start according to the procedure. If it detects the exhaust temperature ≥ 115 ℃ for about 30 seconds, it will work as the above.

4、High pressure protection：when high pressure switch disconnect 3 times within an hour, display panel show error code and alarm. Then compressor off, fan off, cycle water pump off. After high pressure switch recover , postpone 3 minutes ,compressor restart, If high pressure switch disconnect over 3 times within an hour, control panel lock the error, turn off all output signal, and will not restart whether pressure switch will recover or not.

5、Low pressure protection. when low pressure switch disconnect 3 times within an hour, display panel show error code and alarm. Then compressor off, fan off, cycle water pump off. After low pressure switch recover, postpone 3 minutes, compressor restart. If low pressure switch disconnect over 3 times within an hour, control panel will lock the error, close all output signal, and will not restart whether pressure switch

will recover or not..(Remarks: when defrosting, or within 5 minutes after compressor startup, system doesn't test low pressure switch)

6、Sensor error: if sensor occurs error(broken circuit or short circuit), all output stop, and show error code. Sensor can restart after error disappears.

7、Three phase protection：when dial switch 1 select number side, it has three phase test function, it will test three phase supply as soon as power on. If lack of phase or wrong phase , system will enter three phase protection, turn off all output and show error code, it will recover only when trouble removal and power on again.

8、Anti-freezing protection: (A) in the boot state, when the ambient temperature is <5℃, if the compressor stops for more than 15 minutes, circulation pump start to run for 30 seconds. B In the off state, when the ambient temperature is <5 ℃, the water temperature ≤ 2℃, the compressor starts (system runs as setup program) until the temperature of water in tank reaches 12℃, the system will stop and return to the shutdown state.

9、Freezing protection: In the off state, the freezing point switch connects,compressor starts on, then fan on, freezing switch off, compressor off, fans off.

10、Water pressure switch protection: Only for direct outlet modes, (a) water solenoid valve opens, the compressor no start, if the water pressure switch is open for 30 seconds, off all outputs and corresponding error code shall be displayed for 3 minutes, and then stops, re-open the water solenoid valve to supply water, detect again if the water pressure switch restore close or not, if the restore, it will work as the normal procedure, if disconnected, it will work as the above pressure.(b) When the water solenoid valve opens, the compressor starts running, if the water pressure switch is disconnected for 8 seconds, it will turn off all outputs and displays error code for 3 minutes, then it stop displaying, re-open the water valve to supply water and recheck whether to restore water pressure switch is closed, it will work as the normal procedure if the recovers, if disconnected, work as the above processes.

※Ⅵ Installation instruction

1.Installation of the units

Main unit

A) It should be installed in place with large place and good ventilation, the

installation place should guarantees smooth air exhale(for air inhale , refer to the following figure)

B) The installation position should be close to drainage channel or vent to facilitate water discharge

C) Make sure the unit keeps straight up without any inclination after installation.

D) Do not install the mainframe in place where there is pollution , corrosive gas , or accumulation f dirt or fallen leaves. No be close to inflammable and explosive places with obvious fire hazards .

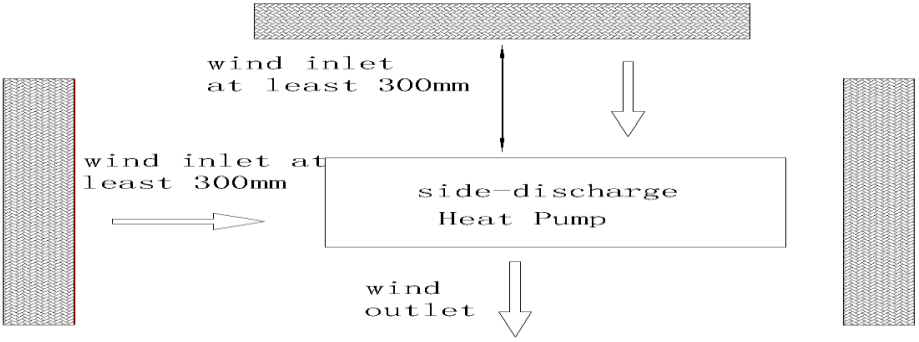

No barrier within 2500mm
before wind outlet

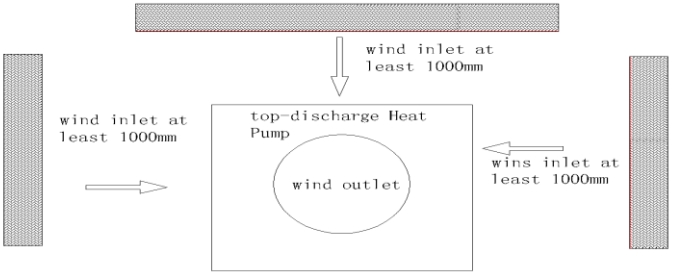

No barrier within 2500mm
before wind outlet

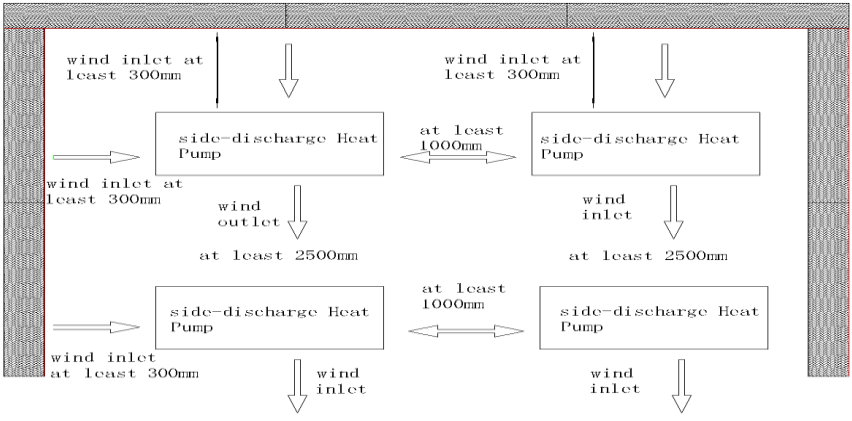

No barrier within 2500mm
before wind outlet

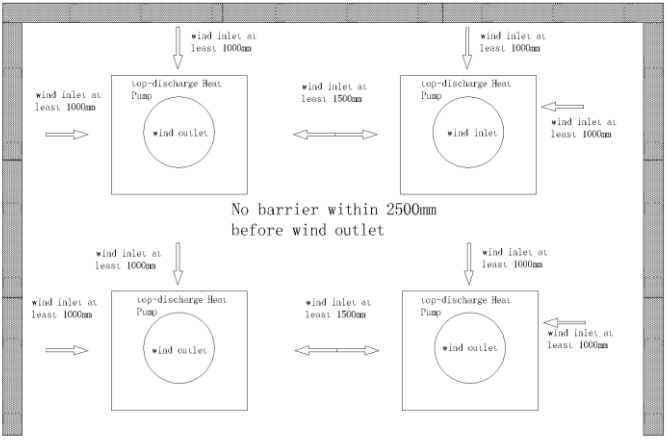

Note: No obstructions within 3 meters of the outlet, unit be installed in well-ventilated place

.2、 Water tank (no included in the machine)

- If possible, water tanks be placed in non-ventilated place to avoid heat loss. Do not install water tankin a contaminated place or with corrosive gases.
- Can be installed outdoors or on the roof (according to the size of the tank and the load-bearing capacity of the building, and so forth)
- Water tanks shall comply with GB4706.12-2006 requirements on tank-type water heaters, and has good insulation properties and corrosion resistance, while the tank liner material should be made of food grade stainless steel, each wall liner pressure should be equal and is able to withstand the pressure when tank is full of water; outer wall of the tank should have a good airtight (to ensure rainwater does not penetrate water tank), able to withstand the weight of the tank full of water without deformation;
- Inlet is down and outlet is up, at least one inlet and one outlet.
- There should be sewage for the tank, ensure that the water in tank be drained out in regular cleaning.
- There should be overflow device in the tank for normal outflow of the water in the tank.

Note: When installing, low water level switch point of the tank should be at least 50mm higher than the inlet
of the unit.

3 Installation of the unit

- The unit installation foundation can be a concrete structure or steel brackets with anti-vibration rubber pad and surface should be on water level.
- The foundation can be designed based on the weight of the unit(refer to technical parameters listed), the foundation for water tank should be a concrete one.
- The bottom of the foundation should fixed with screw. There should be drainage channel or vent near the unit for drainage. If on the roof, waterproof should be made for the roof.

4 Connection of pipes

Installation instructions

- Tank overflow pipe should be installed as near drains or outfalls for drainage, overflow pipes to be installed with drain valve.

- Check valves should be installed before electric solenoid valve water system piping for future maintenance.
- Water supply pressure should be in between 0.3 ~ 0.6Mpa; Also, water filter must be installed in inlet of the unit to ensure the safe operation of the unit.
- The metal pipes should be used (such as stainless steel pipes, pipes coated with with inside. lined with stainless steel, pipes with thin-walled brass, etc.), if plastic pipe is used (such as PP-R pipe, ABS pipe, etc.) elasticity and temperature resistance of pipes between the unit and the tank should be considered.
- Piping systems shall be same as that in the manual. The construction standards should be in accordance with the respective national construction. Piping and joints shall have no leaking.
- Pipes should be installed smoothly, vertically and horizontally, piping layout be reasonable, to minimize bending to reduce water system pressure loss.
- After installation of pipe of water supply pipe from tap water, unit and tank, tightness pressure test and cleaning should be carried out, to ensure the system.
- After test for leakage, do insulation for pipes of hot water system , valves and other devices to prevent too much heat loss, or cracking in winter.

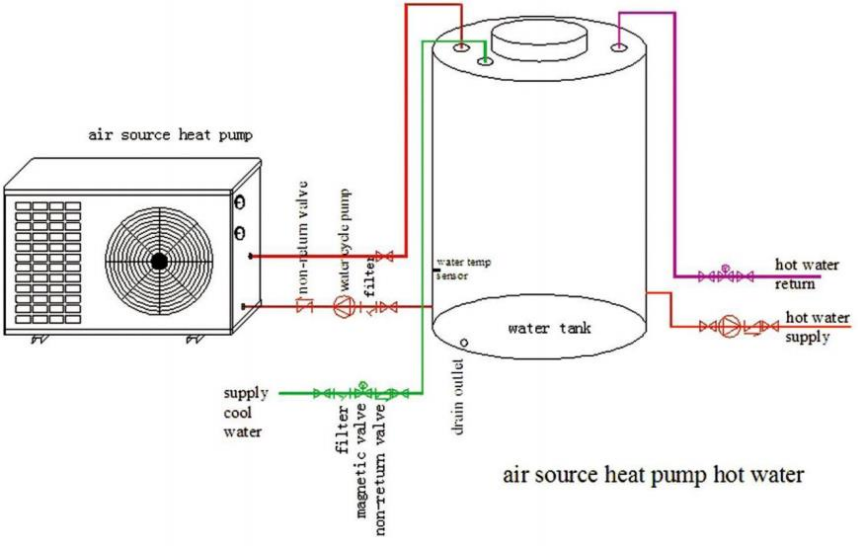

air source heat pump hot water

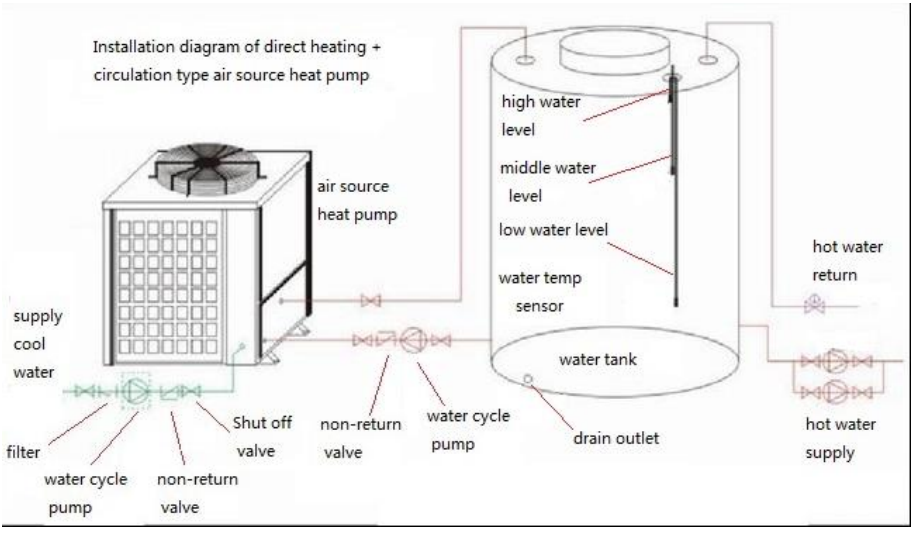

※Ⅶ、Testing and running

1.Preparatory work before the test running

a. Checking of heat pump water heaters.

Check unit appearance and inside piping system to see if any damage, whether the fan blades and the fan

grille fixing plate and fan interference touch each each other..

Check whether there is air inside the pipe unit, if any, empty the air in the pipes of the unit by manual vent

.valve or exhaust valve .

b. Checking of the electrical system

Check whether the power supply is the same as that on the nameplate on the unit.

Check all power and control wiring connections are all in place, whether the correct wiring as the diagram,

grounding reliable, all terminals are all firmly fixed.

c. Checking of the piping system

Check the system piping, fill pipes, return pipe, pressure gauges, thermometers,

valves, level switches and

other equipment are installed correctly.

Check valves in the system is on or off as they should be and insulation for hot water is well or not.

2. Trial running

Trial running must be operated by professionals!

When making sure that entire system is all right, can try the running.

Power on, turn on the heat pump, the unit started after 3 minutes delay. For three-phase power supply unit,

first make sure rotation of the fan, water pump is correct, if not, turn off the power immediately, adjust the

corresponding power supply phase. measure running current of the compressor to check if any

abnormal sounds.

The unit can be used after trial running for a period of time (usually 3 days).

3. Running control

◆ Circulating water heating operation process: on ---- circulating pump running---- fan running----compressor

running

Direct water heating operation process: on ---- water supply valve opening ---- water flow switch off ---- fan

running ---- compressor running

Water tank level control:

◆ Circulating water heating mode: When low water level switch in the tank is off, it delay 10 seconds to open

cold water solenoid valve to supply water, the unit and water supply pump delay 1 minute to stop working;

When low water switch close,the unit can run according to the setting. When the high water level switch close,

solenoid valve delay 15 seconds to cut off. During period of supplying water, it will not supply cold water at

high water level. Not in the period of supplying water, disconnected at high water, it delay 1 minute open water

solenoid valve to supply cold water.

Direct heating water level control: whether in period of water supply, it will

supply cold water if disconnected

at middle water level, it stops when close at high water level. if disconnected at low water level, it will stop the

water supply pump; disconnected at high water level and middle water level closed, it will not supply cold

water.

- Water solenoid valve control: control by the water level in the tank, When required water supply pump, relays or contactor should be added to avoid damage to electrical panels.
- Water pump control: hot water supply time can be set in circulating water heating type unit. (the water pump automatically shuts when the unit is off); cold water will be supplied automatically if needed when the pump is off. (water solenoid valve opens to supply cold water), when low water level switch is turned off,water supply pump will stop.
- Unit control: circulating water heating type unit runs for the first time, only when the low level switch in the tank closes, circulating pumps, compressors, fans can run; when low water level switch is disconnected, it will wait for water solenoid valve to supply water to low water level and the switch closes, then circulating pumps, compressors, fans can run. In direct heating unit, it will supply cold water when the switch is off at low water level, the unit will stop when switch close at high water level.
- Circulating pump control: when circulating water heating type unit runs, the circulating pump runs. When the unit stopps, the circulation pump will delay 30 seconds to stop. For direct heating type unit, the circulating pump will run only when the unit heats the water in tank by circulation or defrost.
- Four-way valve control: when the unit is running, its power is off. The power is on when it defrost.normal boot-way valve in the off state, only when the defrost power work.
- Fan control: when the unit is running, its power is on. The power is off when the unit defrost.

※Ⅷ Troubleshooting

Sheet one

Code	Error	Troubleshooting
01E	wrong phase	change one line of ABC(RST)(L1/L2/L3)
02E	lack of phase	miss one phase.1.power for unit misses one phase 2. Line for power is loose,can be check by power meters or electric pen
03E 63E	water flow switch	1 the wiring terminals on the board has missed the flow switch 2 connection of terminals to the motherboard is bad. 3 the pump is burned or not empty 4 water flow switch is broken.
05E	high pressure switch 1	1, flow obstruction, water pump damage, air in pipes, Y-type filter is blocked. Please check pipes for water (the flow switch can solve the problem); fouling in heat exchanger(water stop on the high voltage before water is heated to 55℃) clean it with oxalic acid. 2, congestion in gas pipes, it will be on the highest pressure once it starts. Take the terminal for four way valve out insert firing line connect point, thenpower on, repeat it for several times at the pass on the power, repeated for several times, if not solve it, have to replace the filter and the throttle elements to solve the problems of high pressure caused by congestion in gas pipes; 3, high voltage switch broken, suggest high-voltage switch can be cut, make a high voltage at the needle plug to connect it to replace.
07E	high pressure switch 2	
65E	high pressure switch 3	
76E	high pressure switch 4	
06E	low pressure switch 1	1. Refrigerant leakage, low pressure meters to zero, check the leakage point and fix it. was vacuum it and fill the same refrigerant as on the label. 2 Low pressure switch broken, suggest that the low-voltage be cut, make a low voltage at the needle plug to connect it to replace. 3 Throttle completely blocked.
08E	low pressure switch 2	
66E	low pressure switch 3	
68E	low pressure switch 4	
09E	communication	problem of cable between motherboard and screen 1 crystal head be broken, take it out and re-plug again, if wire core broken, check it with multimeter and replace it with a new one 2 if the base of motherboard and the base of panel crystal head broken, replace them.
11E	limit time	set the running time, cannel of running time.
12E	exhaust temp1 too high	1, refrigerant is not enough (stop the unit to check the pressure meter); 2, wate pipes barrier (problem of high pressure); 3, throttling element semi-resistive (problem of high pressure); 4, if A3, B3 , C3, D3's temperature exceeds 105℃ when the unit is not running, sensor of exhaust or motherboard should be replaced.
13E	exhaust temp2 too high	
72E	exhaust temp3 too high	
73E	exhaust temp4 too high	
15E	senor of temp	1, check the sensor if it is connected. 2, check whether the resistance

23E	in water tank	of the sensor is exceeded. 3, replace the sensor.
16E	senor of coil temp1	1, check the sensor if it is connected. 2, check whether the resistance of the sensor is exceeded. throttling element semi-resistive (problem of high pressure); 3, if A1, B1, C1, D1's temperature exceeds 105℃ when the unit is not running, sensor of exhaust or motherboard should be replaced.
17E	senor of coil temp 2	
76E	senor of coil temp 3	
77E	senor of coil temp 4	
18E	senor of exhaust 1	1, check the sensor if it is connected. 2, check whether the resistance of the sensor is exceeded. throttling element semi-resistive (problem of high pressure); 3 if A3, B3, C3, D3's temperature exceeds 105℃ when the unit is not running, sensor of exhaust or motherboard should be replaced.
19E	senor of exhaust 2	
78E	senor of exhaust 3	
79E	senor of exhaust 4	
21E	senor of ambient temp	1, check the sensor if it is connected. 2, check whether the resistance of the sensor is exceeded. throttling element semi-resistive (problem of high pressure); 3, if A4, B4, C4, D4's temperature exceeds 105℃ when the unit is not running , sensor of exhaust or motherboard should be replaced.
22E	senor of return water	1, check the sensor if it is connected. 2, check whether the resistance of the sensor is exceeded. throttling element semi-resistive (problem of high pressure); 3, if A6, B6, C6, D6's temperature exceeds 105℃ when the unit is not running , sensor of exhaust or motherboard should be replaced.
22E	senor of floor heating	same as above (note: hot water, floor heating type heat pump)
25E	senor of water level	check the water level line if it is not well-connected or oxidation
26E	temp of inlet too high	code of water source heat pump
27E	outlet water sensor 1	1, check the sensor if it is connected. 2, check whether the resistance of the sensor is exceeded. throttling element semi-resistive (problem of high pressure); 3 if A5, B5, C5, D5's temperature exceeds 105℃ when the unit is not running, sensor of exhaust or motherboard should be replaced.
28E	outlet water sensor 2	
29E	return gas sensor 1	1, check the sensor if it is connected. 2, check whether the resistance of the sensor is exceeded. throttling element semi-resistive (problem of high pressure); 3 if A2, B2, C2, D2's temperature exceeds 105℃ when the unit is not running, sensor of exhaust or motherboard should be replaced.
30E	return gas sensor 2	
89E	return gas sensor 3	
90E	return gas sensor 4	
31E	water pressure switch broken	check the water pressure is above the range of the pressure switch.

32E	cooling water temp too low	water flow is not enough when it is cooling, temperature sensor broken
33E	ice point error	check the connection of ice point and public terminals
35E	compressor 1 over current	set parameter of L8 in function setting to 0
36E	compressor 2 over current	
95E E	compressor 3 over current	
96E	compressor 4 over current	
37E	no water flow in thermostat 1	Check whether there is tap water to units, water inlet valve is open. If no thermostat, set L3 to 35
38E	no water flow in thermostat 2	
39E	too high temp for cooling water	inlet temp exceeds 40℃ when it is cooling, temperature sensor broken

Sheet 2

Problems	Possible cause	Handling measures
unit not running	✧ power failure ✧ unit power wiring loose ✧ unit control power fuse blown ✧ low water level reversed	✧ cut then check the power ✧ identify the cause and fix ✧ replace with new fuse ✧ check and re-wiring
water runs but water not circulate and the pump noise is big	✧ lack water system water ✧ air in water system ✧ valves in water system not all open ✧ water filter fouling	✧ check water system, and supply water ✧ empty the air in the water system ✧ open all valves in the water system ✧ clean water filter
low heating capacity	✧ insufficient refrigerant ✧ poor water system insulation ✧ Filter clogging ✧ poor cooling in air heat exchanger ✧ insufficient water flow	✧ detect the leak and charge refrigerant ✧ ehance water system insulation ✧ replace the filter ✧ Clean the air heat exchanger ✧ clean water filter
compressor not running	✧ power failure ✧ contactor to the compressor broken ✧ loose wiring ✧ compressor overheating protection ✧ outlet water temperature too high ✧ insufficient water flow	✧ identify the reason and solve it ✧ replace contactor ✧ identify and repair the loose points ✧ identify the cause of the overheating and troubleshoot the problem ✧ re-set the outlet water temperature ✧ clean water filters and empty air in the system

compressor noisy	✧ liquid refrigerant in the compressor ✧ internal parts of compressor broken	✧ check whether the expansion valve broken ✧ replace the compressor
fan not running	✧ fan set screws loose ✧ fan motor burned ✧ contactor broken	✧ tighten set screws ✧ replace the fan ✧ replace contactor
compressor running but no heating	✧ refrigerant leaks ✧ compressor broken	✧ detect leak and charge refrigerant ✧ Replace the compressor
low water flow protection	✧ insufficient water flow system ✧ too small water flow pump	✧ Clean water filters and empty the air in the water system ✧ configure the appropriate water flow pump
high discharge pressure	✧ excessive refrigerant ✧ non-condensable gas in fluorine system ✧ insufficient water flow	✧ discharge excess refrigerant ✧ discharge non-condensable gas ✧ check the water system, increase the water flow
low suction pressure	✧ filter clogging ✧ solenoid valve not open ✧ too much pressure drop through the heat exchanger	✧ replace the filter ✧ repair or replace the solenoid valve ✧ check the expansion valve opening degree of appropriateness
abnormal communication	✧ control panel can not exchange data with the motherboard ✧ cable connector loose or electrical control panel broken	✧ re-fix connector or change control board
water level switch alarm	✧ low and high water level sensor reverse, low level sensor broken	✧ swap wiring or replace water level switch

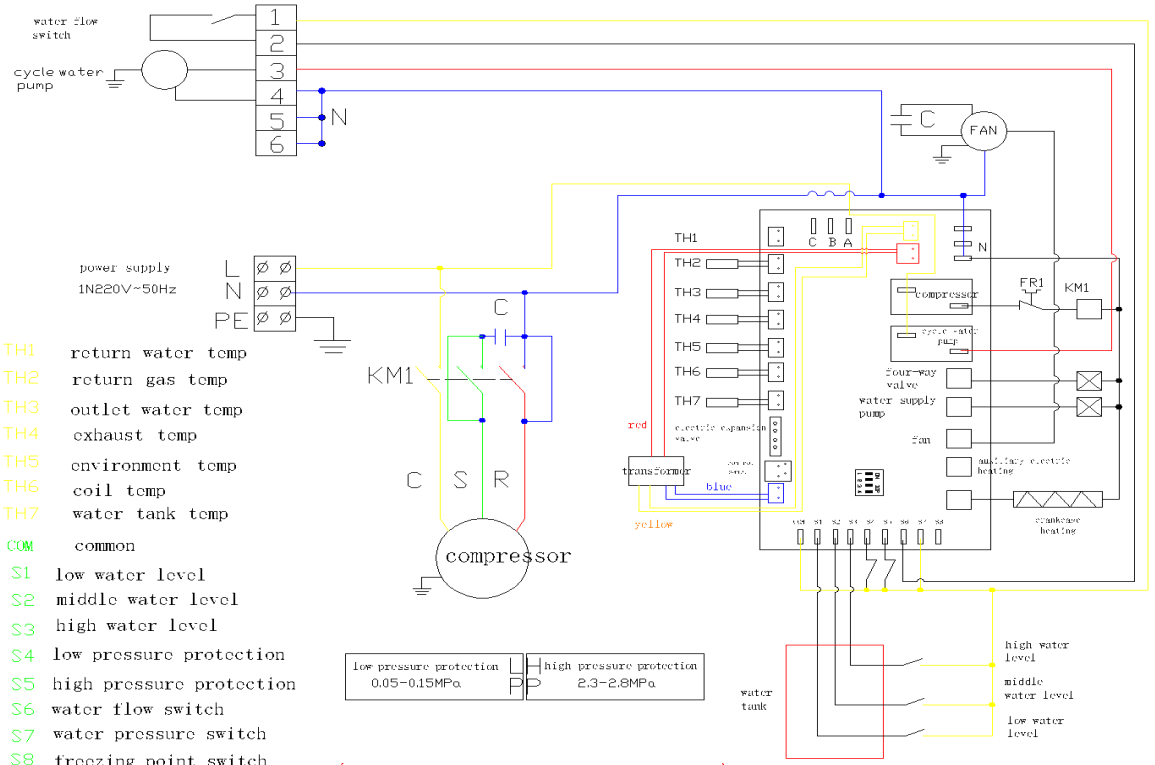

TH1 return water temp
TH2 return gas temp
TH3 outlet water temp
TH4 exhaust temp
TH5 environment temp
TH6 coil temp
TH7 water tank temp
COM common
S1 low water level
S2 middle water level
S3 high water level
S4 low pressure protection
S5 high pressure protection
S6 water flow switch
S7 water pressure switch
S8 freezing point switch

(Apply for MD15, MD20, MD30)

220V air source single compressors system wiring diagram

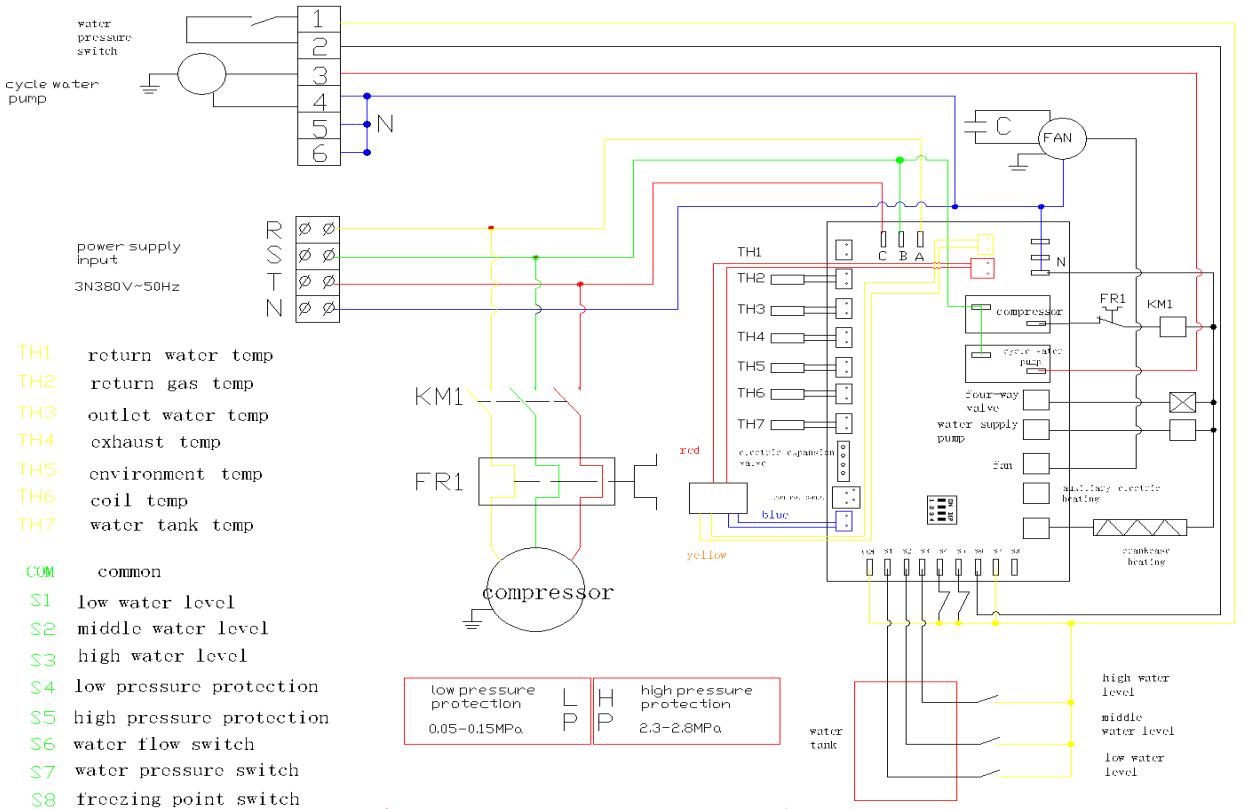

TH1 return water temp
TH2 return gas temp
TH3 outlet water temp
TH4 exhaust temp
TH5 environment temp
TH6 coil temp
TH7 water tank temp

COM common
S1 low water level
S2 middle water level
S3 high water level
S4 low pressure protection
S5 high pressure protection
S6 water flow switch
S7 water pressure switch
S8 freezing point switch

(Apply for MD30, MD50, MD60)

380V air source single compressors system wiring diagram

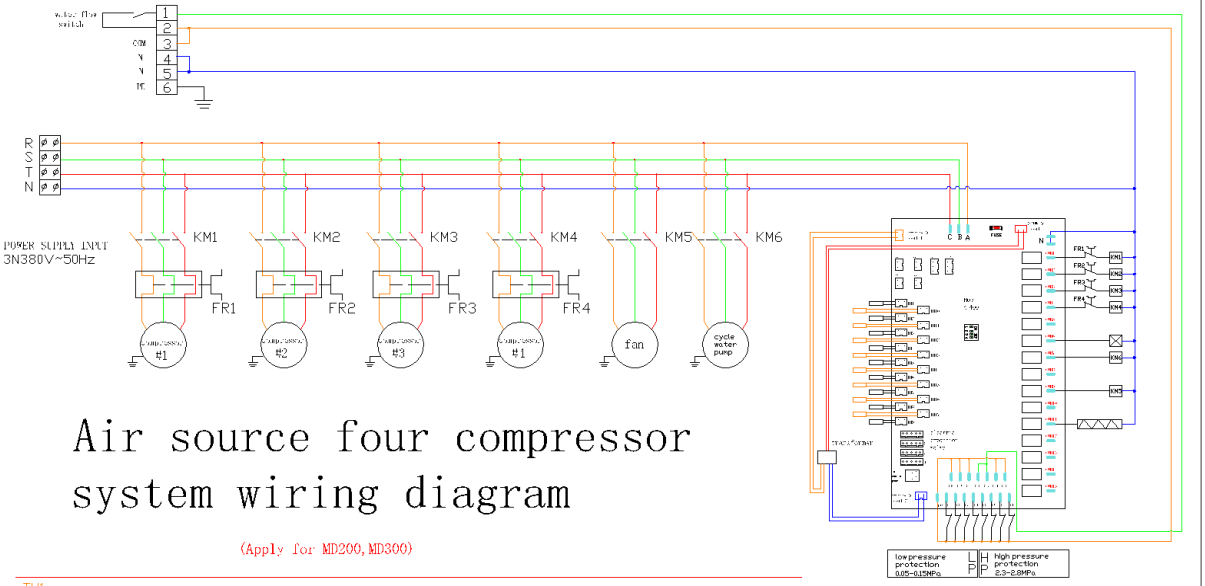

Air source four compressor system wiring diagram

(Apply for MD200,MD300)

TH1	return water temp	TH10	exhaust temp 4	COM	common	S9	low water level	CON1	compressor 1	CON9	high wind speed
TH2	environment temp	TH11	exhaust temp 3	S1	low pressure protection 4	S10	middle water level	CON2	compressor 2	CON10	low wind speed
TH3	return gas temp 4	TH12	exhaust temp 2	S2	low pressure protection 3	S11	High water level	CON3	compressor 3	CON11	crankcase heating
TH4	return gas temp 3	TH13	exhaust temp 1	S3	low pressure protection 2	S12	water flow switch 2	CON4	compressor 4	CON12	auxiliary electric heating
TH5	return gas temp 2	TH14	coil temp 4	S4	low pressure protection 1	S13	water flow switch 1	CON5	Spare	CON13	return water valve
TH6	return gas temp 1	TH15	coil temp 3	S5	high pressure protection 4	S14	water pressure switch	CON6	4-way valve	CON14	water supply pump
TH7	outlet water temp 2	TH16	coil temp 2	S6	high pressure protection 3	S15	freezing point switch	CON7	cycle water pump	CON15	Spare
TH8	outlet water temp 1	TH17	coil temp 1	S7	high pressure protection 2			CON8	water supply valve		
TH9	water tank temp			S8	high pressure protection 1						

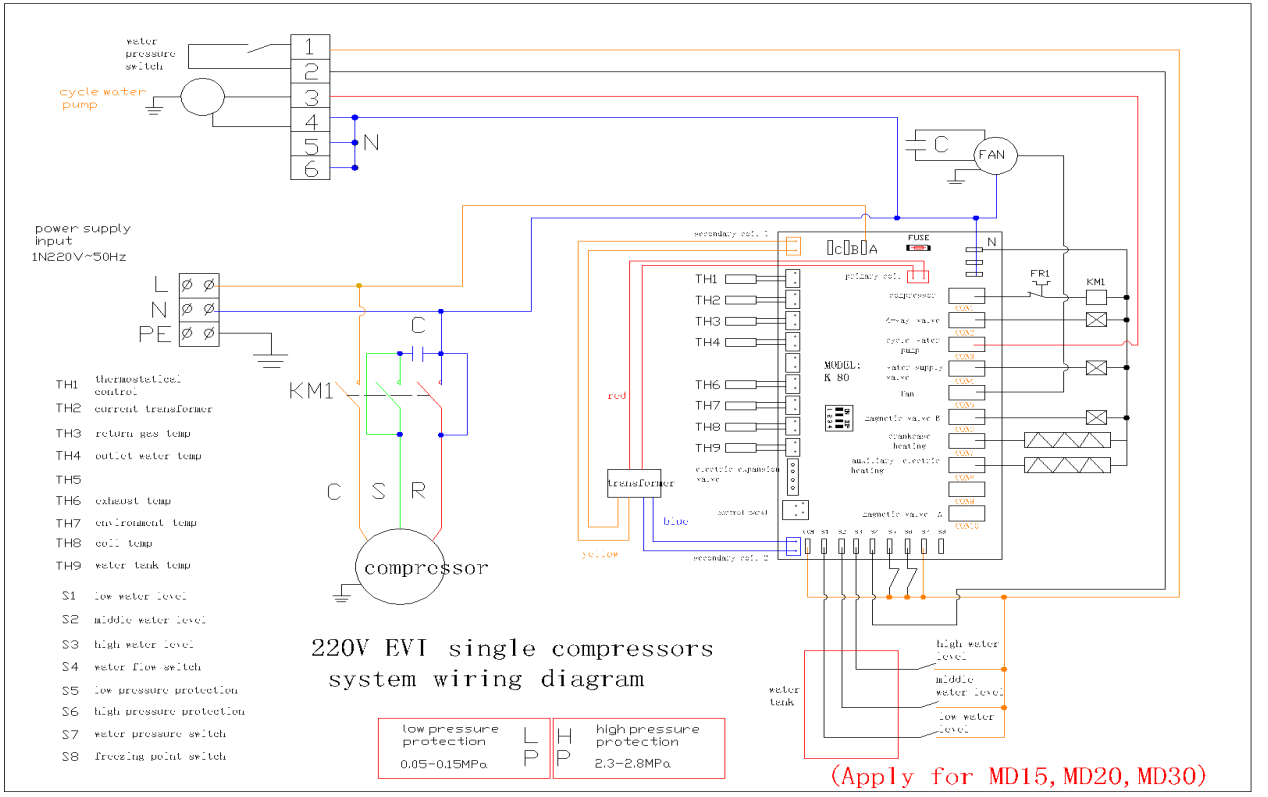

water pressure switch
cycle water pump
1
2
3
4
5
6
N
C
FAN
power supply input
1N220V~50Hz
L
N
PE
C
KM1
C
S
R
compressor
secondary coil 1
FUSE
N
primary coil
FR1
KM1
TH1
TH2
TH3
TH4
TH6
TH7
TH8
TH9
MODEL: K 80
compressor
4-way valve
cycle water pump
water supply valve
Fan
magnetic valve B
crankcase heating
auxiliary electric heating
magnetic valve A
electric expansion valve
control board
red
transformer
blue
yellow
secondary coil 2
high water level
middle water level
low water level
water tank
TH1 thermostatical control
TH2 current transformer
TH3 return gas temp
TH4 outlet water temp
TH5
TH6 exhaust temp
TH7 environment temp
TH8 coil temp
TH9 water tank temp
S1 low water level
S2 middle water level
S3 high water level
S4 water flow switch
S5 low pressure protection
S6 high pressure protection
S7 water pressure switch
S8 freezing point switch
220V EVI single compressors system wiring diagram
low pressure protection
0.05-0.15MPa
L P
H P
high pressure protection
2.3-2.8MPa
(Apply for MD15, MD20, MD30)

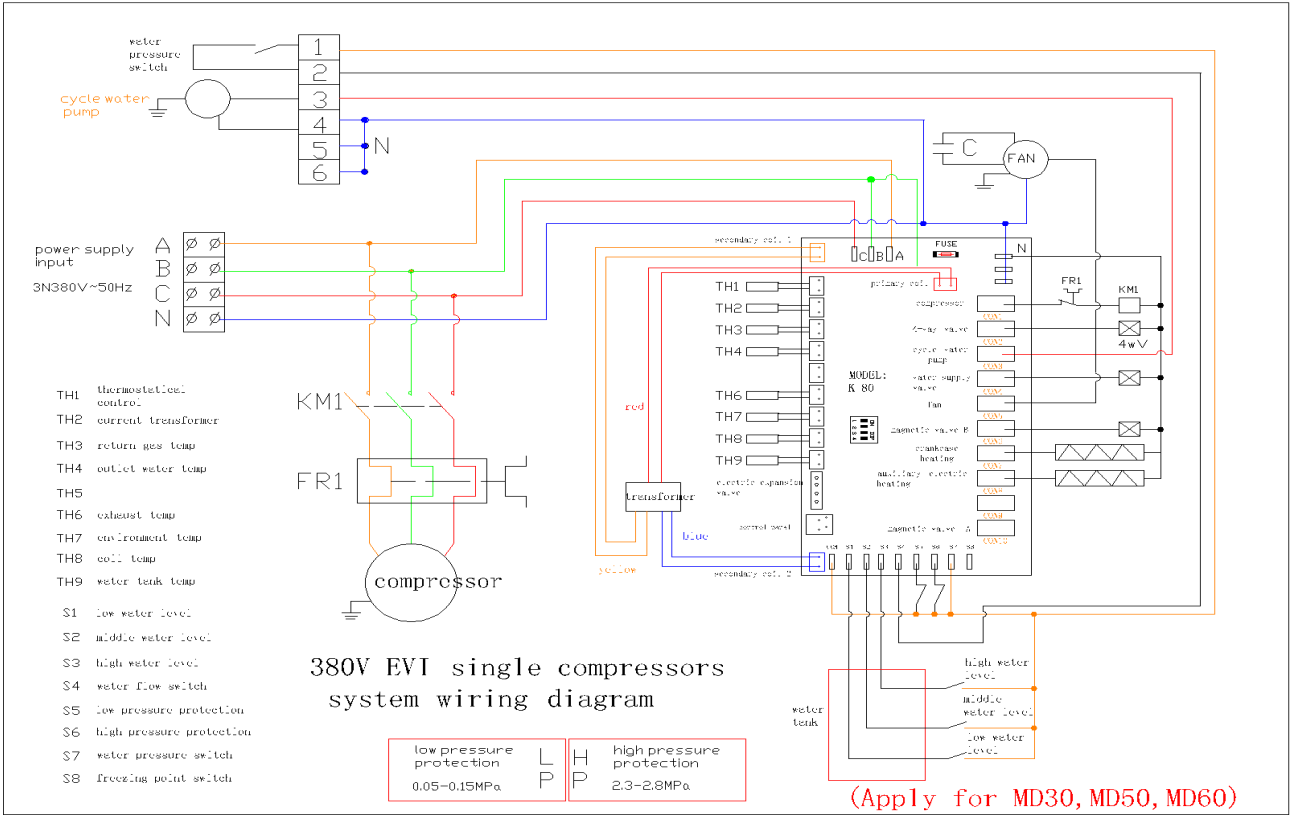

TH1 thermostatical control
TH2 current transformer
TH3 return gas temp
TH4 outlet water temp
TH5
TH6 exhaust temp
TH7 environment temp
TH8 coil temp
TH9 water tank temp

S1 low water level
S2 middle water level
S3 high water level
S4 water flow switch
S5 low pressure protection
S6 high pressure protection
S7 water pressure switch
S8 freezing point switch

380V EVI single compressors system wiring diagram

low pressure protection	LP	high pressure protection	HP
0.05-0.15MPa		2.3-2.8MPa	

(Apply for MD30, MD50, MD60)

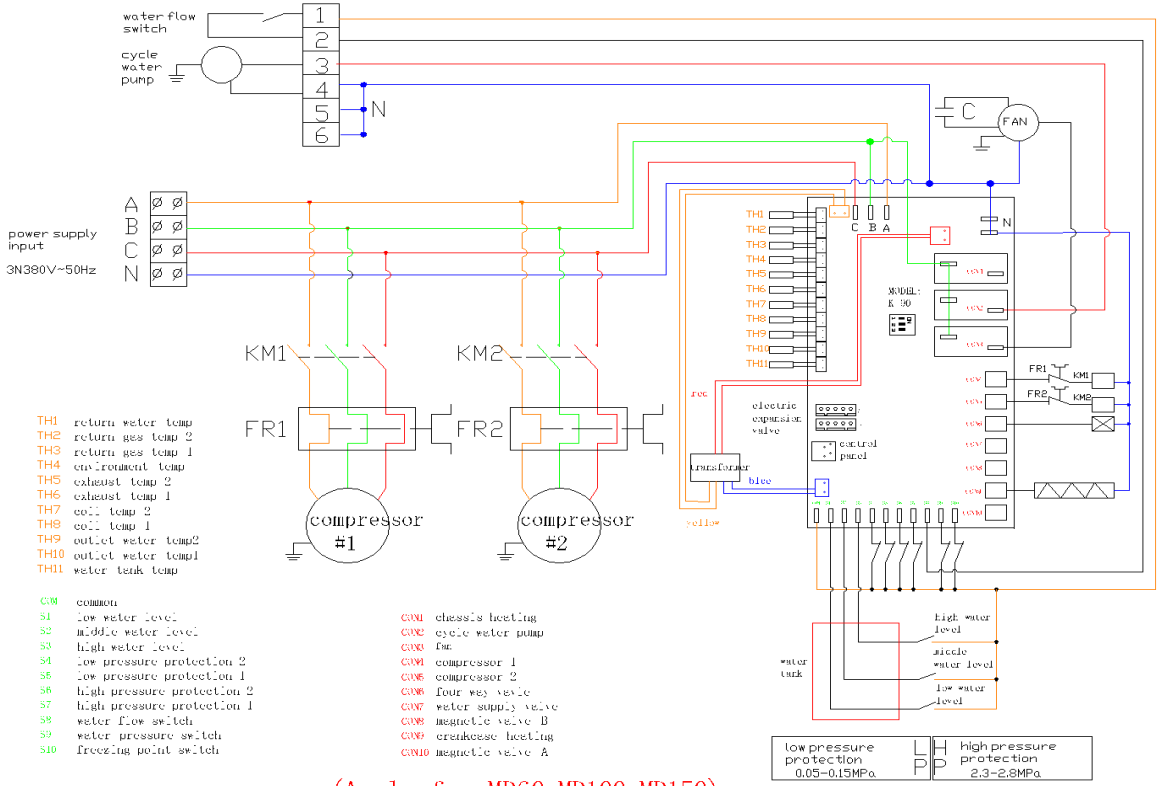

(Apply for MD60, MD100, MD150)

380V EVI double compressors system wiring diagram

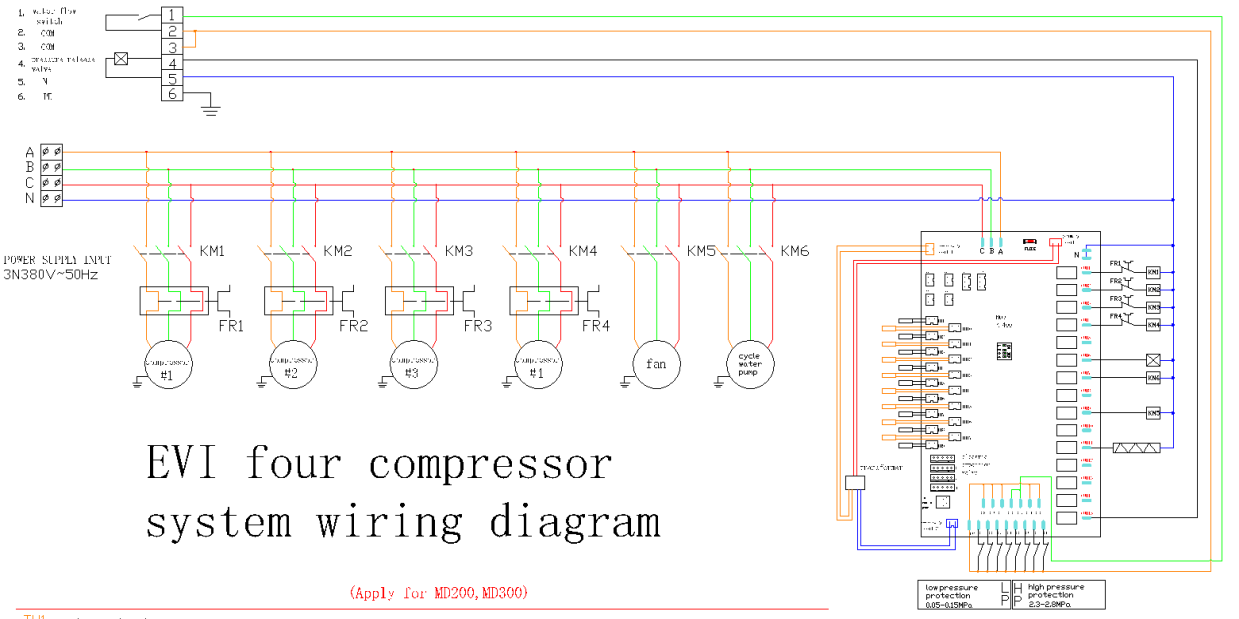

EVI four compressor system wiring diagram

(Apply for MD200,MD300)

TH1 return water temp
TH2 environment temp
TH3 return gas temp 4
TH4 return gas temp 3
TH5 return gas temp 2
TH6 return gas temp 1
TH7 outlet water temp 2
TH8 outlet water temp 1
TH9 water tank temp
TH10 exhaust temp 4
TH11 exhaust temp 3
TH12 exhaust temp 2
TH13 exhaust temp 1
TH14 coil temp 4
TH15 coil temp 3
TH16 coil temp 2
TH17 coil temp 1

COM common
S1 low pressure protection 4
S2 low pressure protection 3
S3 low pressure protection 2
S4 low pressure protection 1
S5 high pressure protection 4
S6 high pressure protection 3
S7 high pressure protection 2
S8 high pressure protection 1
S9 low water level
S10 middle water level
S11 high water level
S12 water flow switch 2
S13 water flow switch 1
S14 water pressure switch
S15 freezing point switch

CON1 compressor 1
CON2 compressor 2
CON3 compressor 3
CON4 compressor 4
CON5 liquid injection valve
CON6 4-way valve
CON7 cycle water pump
CON8 water supply valve
CON9 high wind speed
CON10 low wind speed
CON11 crankcase heating
CON12 auxiliary electric heating
CON13 return water valve
CON14 water supply pump
CON15 pressure release valve

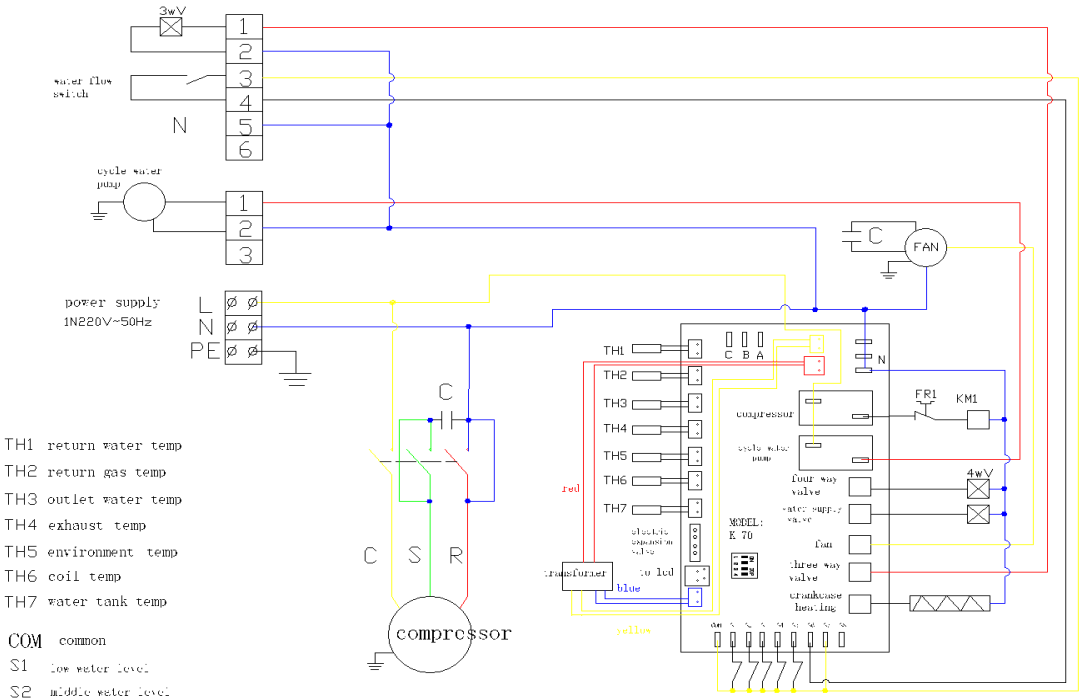

TH1 return water temp
TH2 return gas temp
TH3 outlet water temp
TH4 exhaust temp
TH5 environment temp
TH6 coil temp
TH7 water tank temp

COM common
S1 low water level
S2 middle water level
S3 high water level
S4 low pressure protection
S5 high pressure protection
S6 water flow switch
S7 water pressure switch

(Apply for MD15, MD20, MD30)

220V single compressor system with three-way valve wiring diagram

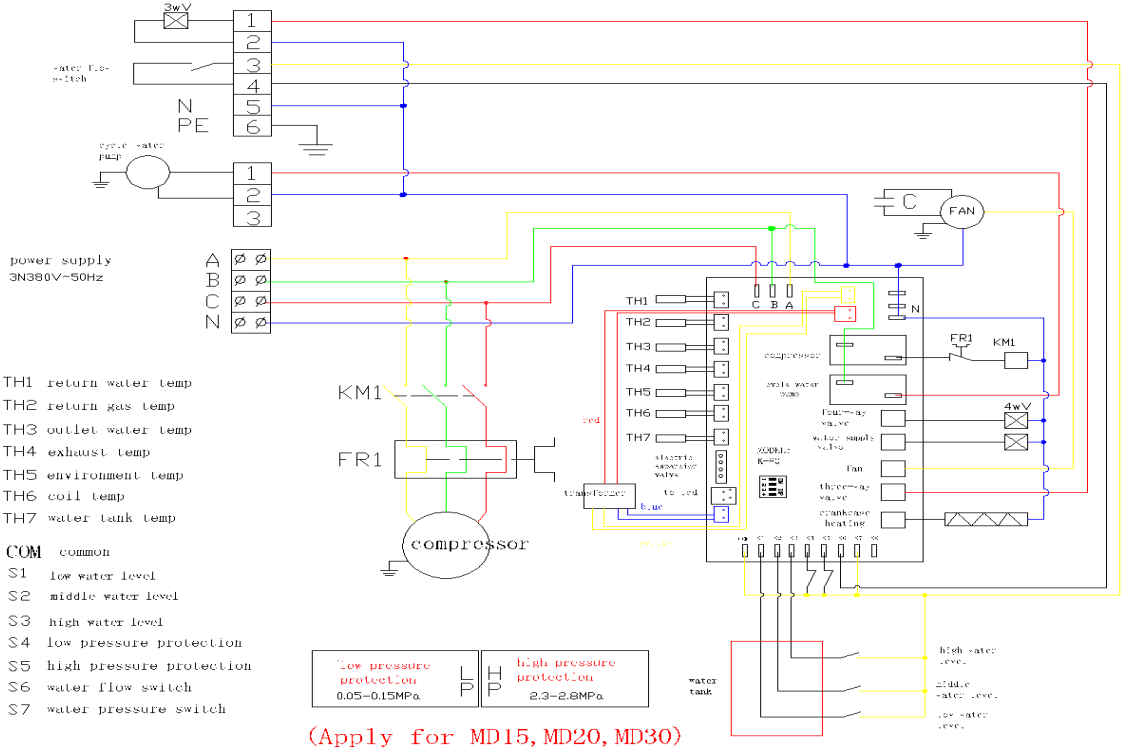

380V single compressor system with three-way valve wiring diagram

※Ⅹ Care and Maintenance

- Water filter installed outside the unit should be cleaned regularly to ensure water clean within the system in order to avoid the damage of unit due to water filter fouling.
- Users in the use and maintenance of the unit should pay attention to: all safety protections are set at ex-factory , please do not adjust them.
- Always check the unit's power supply and the electrical system wiring , the electrical components, if necessary, timely maintain and replace them.
- Always check the water level controller in the systems and exhaust piping system, the volume of water cycle is reduced in case sir comes into the system, thus affecting the unit's heating capacity and reliability
- Check the water pump, water valve, pipes and joints in the system regularly
- Keep clean and dry, well-ventilated. Cleaning air-side of heat exchanger regularly (recommended cleaning when seasons changing), in order to maintain good heat exchange.
- Always check the work of the various components of the unit, check the inside pipe joints and filling valve if there are oil, ensure that the unit refrigerant leak.
- Always check the various components of the unit, check if there is oil in pipe joints and filling valve to ensure that there is no refrigerant leak.
- Do not pile debris around the unit to prevent blockage of air inlet and outlet, it should be kept clean and dry, well-ventilated around the unit.
- If the unit does not run for a long time, water in the pipes should be emptied. Power supply it should be cut off , and protective cover should be put on. Then run when the system before starting a Please make a comprehensive inspection before running the unit again..
- When the unit broken, the user can not troubleshoot the problem, please call the agent for timely repair.